Kasco®

MOVING WATER FORWARD, SINCE 1968

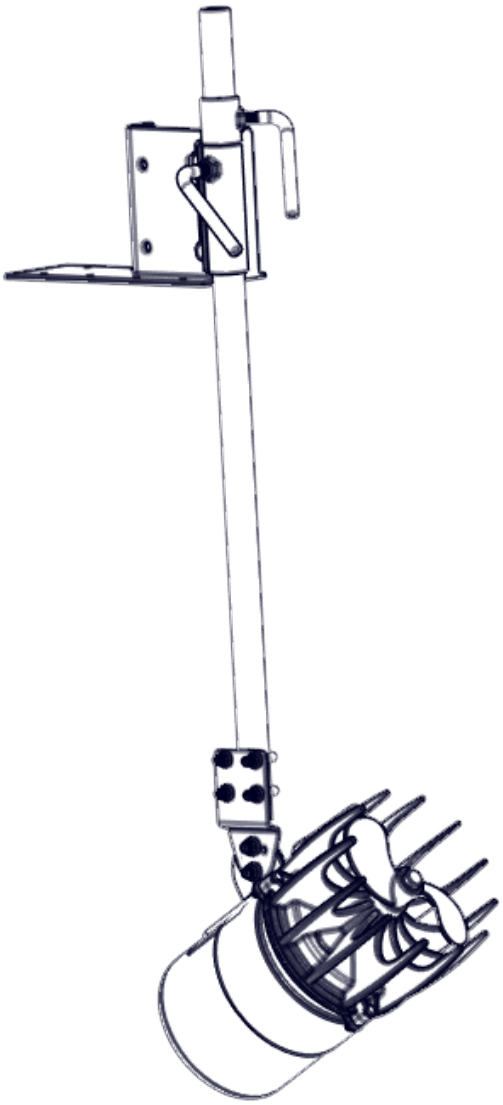

UNIVERSAL MOUNT
with Simple Swivel
Kit 243478

Assembly Manual

Intertek

3020379
ANSI/UL 778: 2016
Ed.6+R:22Feb2017
CSA C22.2 #108: 2014 Ed.5

Document number 243476
Document version 2021.1.0

800 Deere Rd. Prescott, WI 54021 | 715.262.4488 | sales@kascomarine.com | kascomarine.com

TABLE OF CONTENTS

Suggested Tools & Supplies 1
Parts Included 2
Mounting Options 3
Mount Assembly Instructions 4
Adjustments and Storage 8

SUGGESTED TOOLS & SUPPLIES

- 1" (schedule 40 minimum) galvanized or stainless steel (1-5/16" outer diameter) pipe. Max 10' long. NOT INCLUDED.
- Eight 5/16" lag screws or bolts for mounting base (optional U-Bolt Kit available: P/N 997108K)
- 3/4" wrench
- 3/4" socket wrench
- 9/16" socket wrench
- 9/16" wrench

NOTE

Installation may require the help of another person.

Installation may vary; the user is to supply the appropriate hardware to secure the mounting bracket to the dock or piling. Kasco suggests stainless steel.

Illustrations in this manual feature an AquatiClear unit; the same mount assembly instructions also apply for other Kasco products.

QUESTIONS?

715.262.4488

kascomarine.com | sales@kascomarine.com

Back to Contents

PARTS INCLUDED

ID	Description	Qty.	Part No.
A	Base	1	997102
B	Simple Swivel	1	997113
C	Bracket	1	997112
D	Lock handle	2	997170
E	1/2”-13 X 1-1/4” serrated flange screw	1	840531
F	1/2”-13 x 1/4” shoulder bolt	1	451114
G	1/2”-13 serrated flange nut	2	840530
H	Plate	1	997178
I	U-bolt	2	997104
J	5/16”-18 serrated flange nut	4	840534
K	3/8”-16 x 1” serrated flange screw	2	840533
L	3/8"-16 serrated flange nut	2	840532
M	Can strap	1	997174

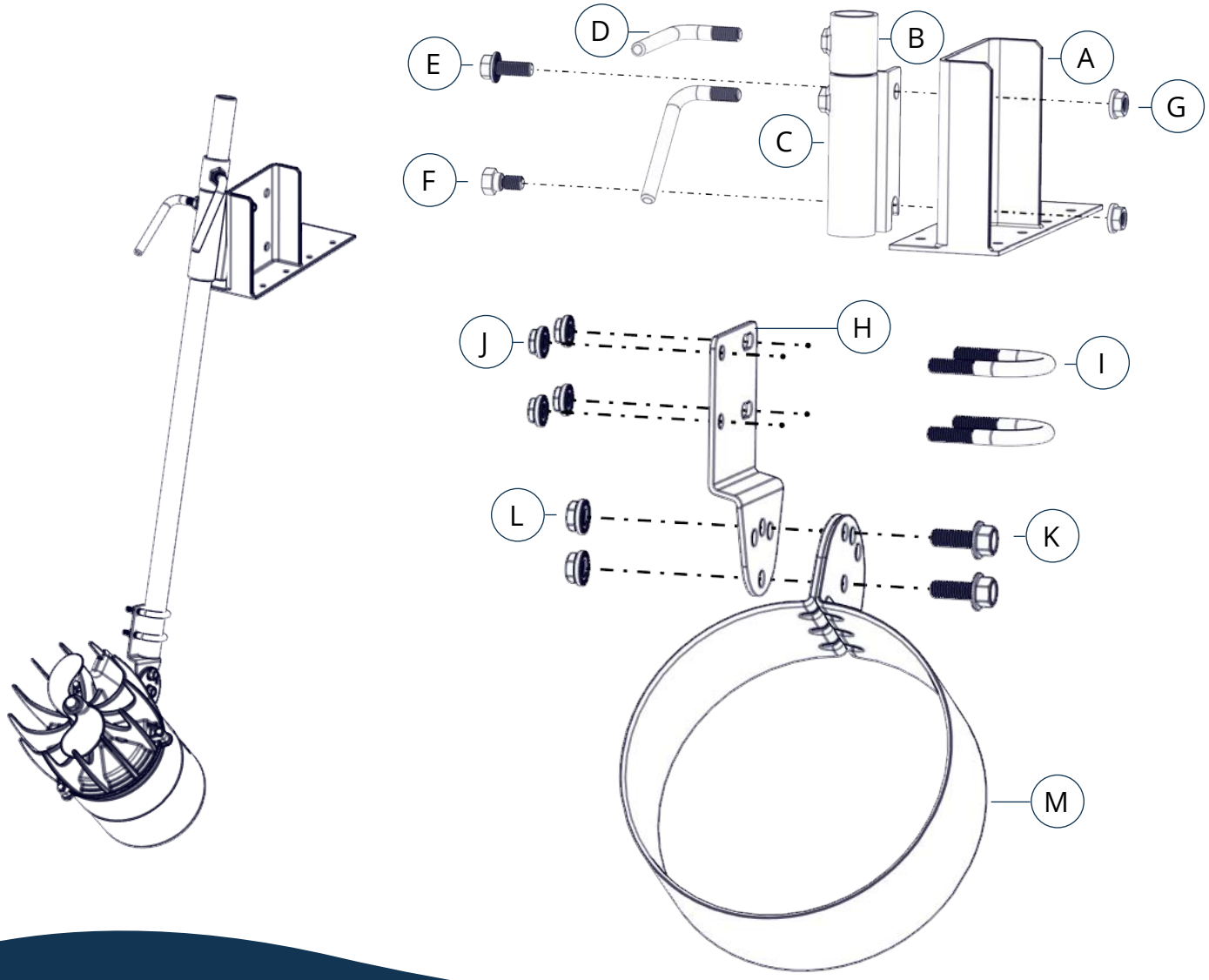

Back to Contents

MOUNTING OPTIONS

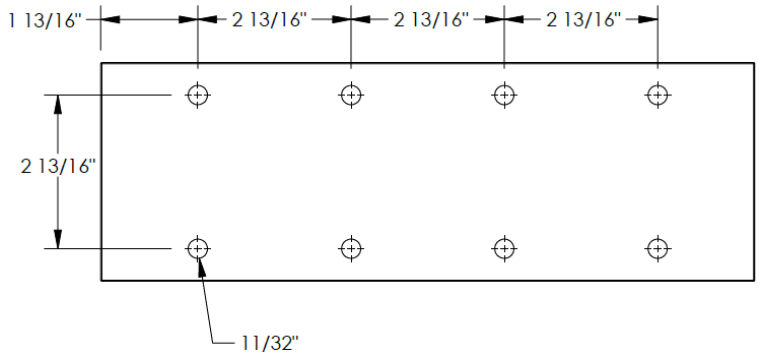

Base (part A) hole location dimensions

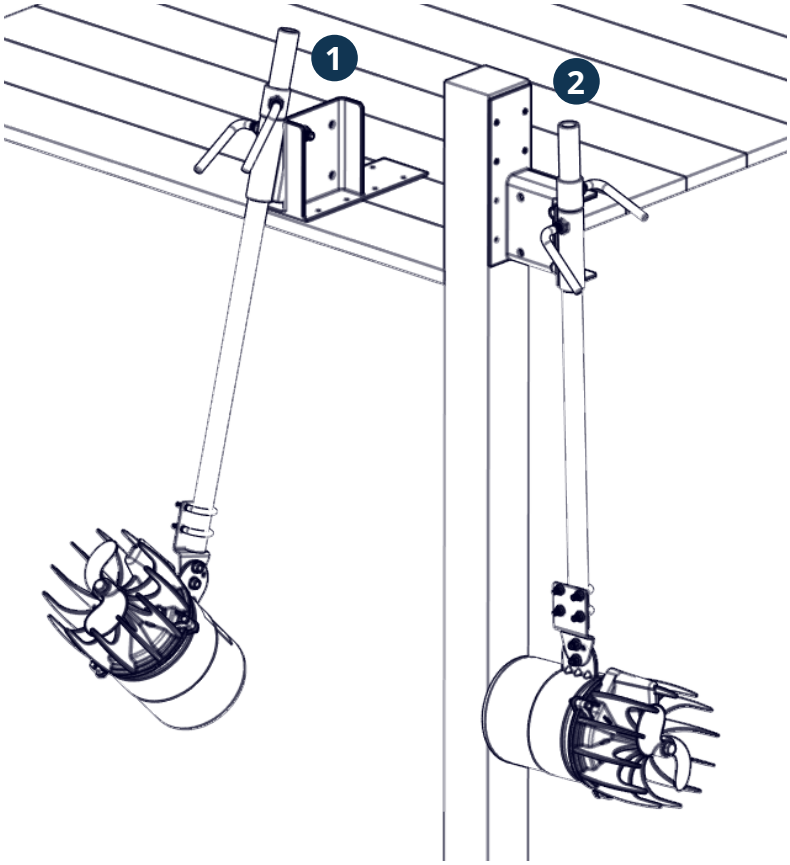

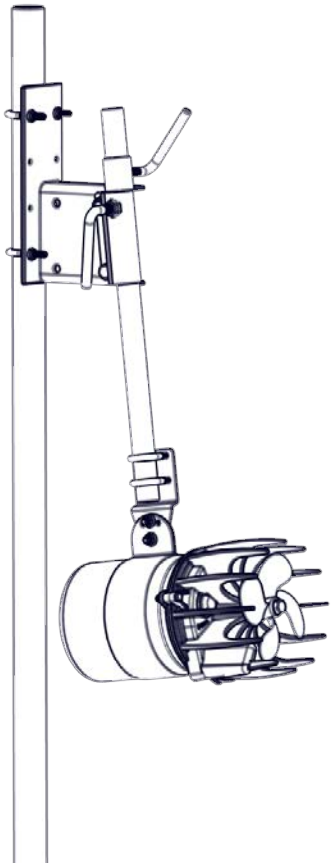

Dock Mount

Mount the base horizontally on the dock (1) or vertically on a piling or other structure (2).

See pages 4-5 for angling instructions.

Pipe Mount

Shown with U-bolt kit PN 997108K. (sold separately)

Back to Contents

MOUNT ASSEMBLY INSTRUCTIONS

1. Slide the can strap (M) into position on the unit as shown below.
2. Position 1-1/2" from the can lip, ensuring the cord is in line with the can strap flanges.

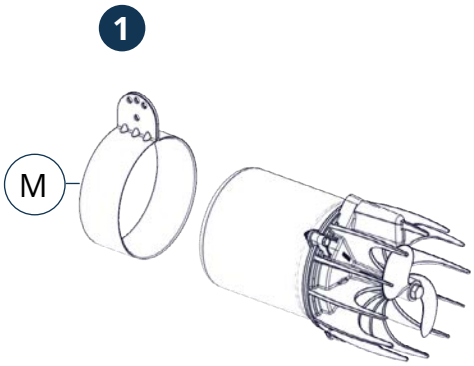

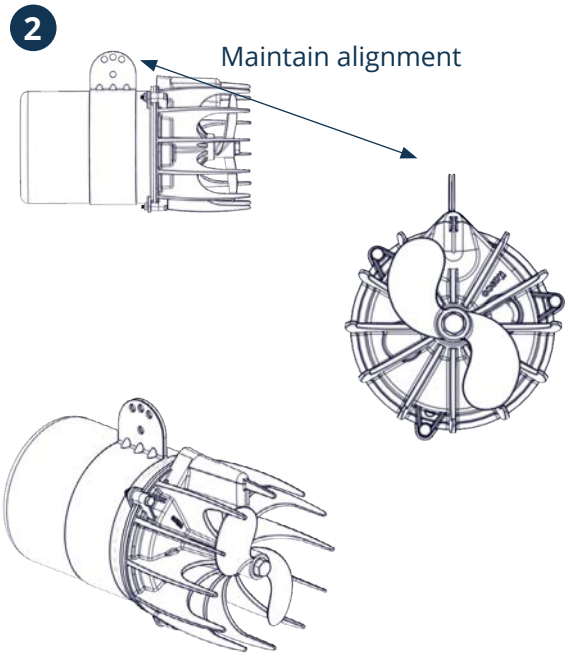

3. Secure the can strap to the plate (H) with two 3/8" x 1" serrated flange screws (K) and two 3/8" serrated flange nuts (L). Ensure the can strap flanges are not split by the strut.

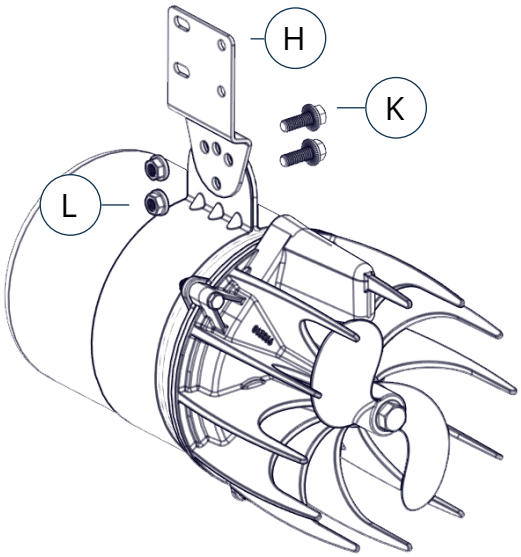

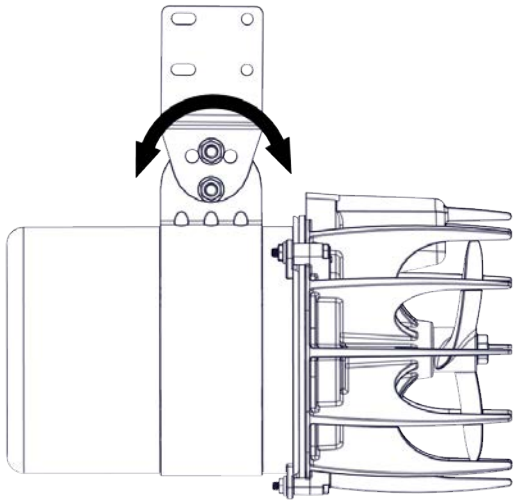

Set the angle of the unit in the water by securing top hardware in one of three holes. See next page for angling options.

Back to Contents

MOUNT ASSEMBLY INSTRUCTIONS (CONT.)

4. Multiple positions for mounting the unit are possible; after assembly of the mount, it may be necessary to adjust the unit to the most ideal orientation.

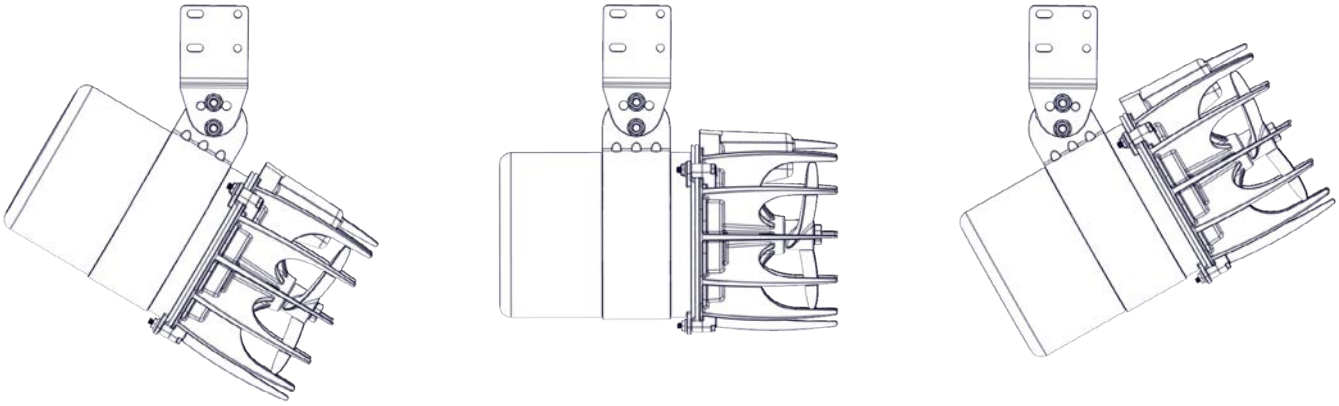

5. Place the U-bolts (I) through the holes on the strut and start the 5/16" serrated flange nuts (J) on the threads before inserting the pipe.
6. Insert the pipe, then fully tighten all the U-bolt hardware, ensuring that the pipe sits on the strut plate.

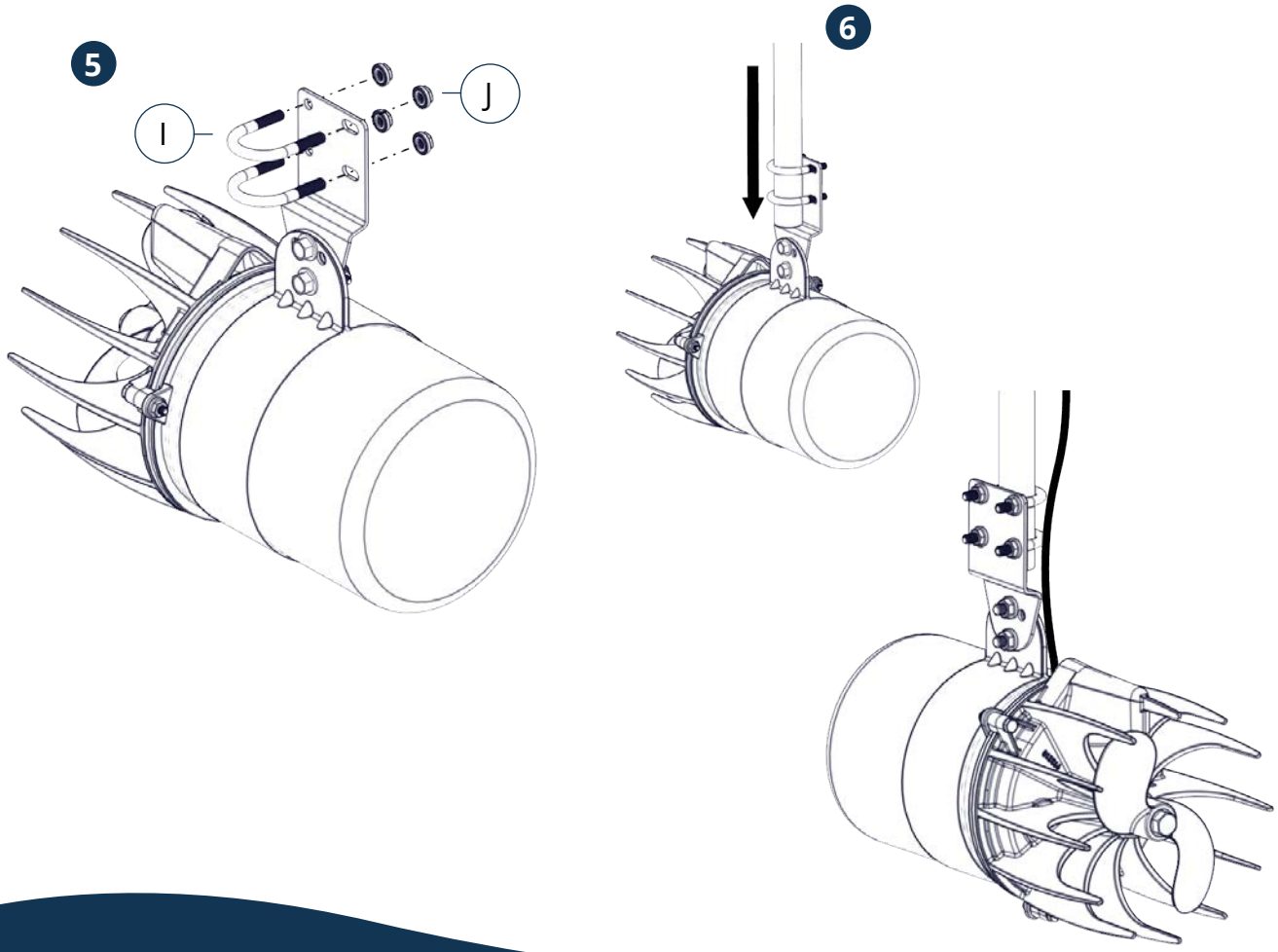

MOUNT ASSEMBLY INSTRUCTIONS (CONT.)

7. Slide the pipe bracket (C) and the Simple Swivel bracket (B) over the pipe. Ensure that the notched end of the bracket is toward the unit end of the pipe. To prevent galling, apply a small amount of grease (packet included) to the lock handles (D) before tightening. Secure both brackets to the pipe by tightening the lock handles.

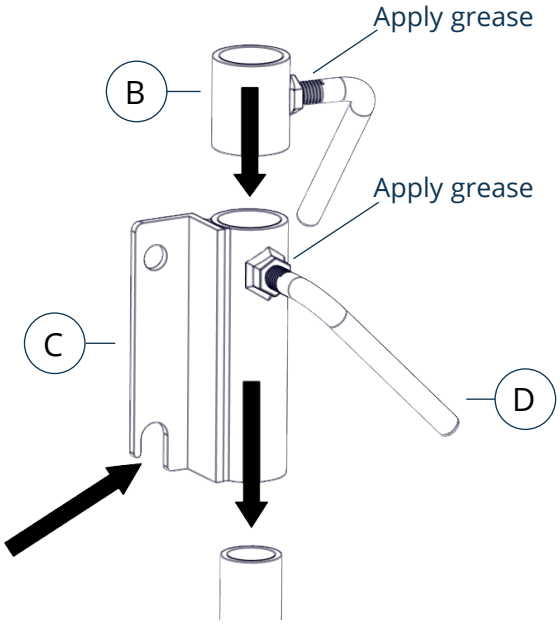

Turn clockwise to tighten lock handles.

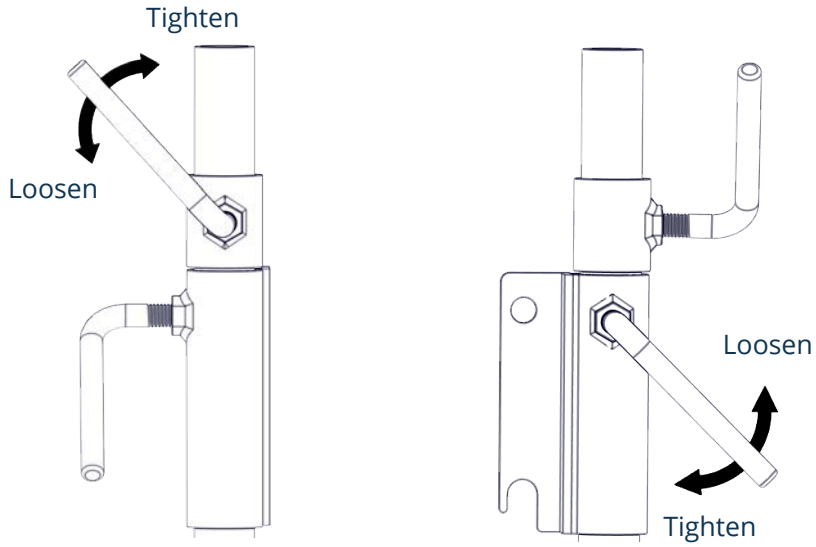

Back to Contents

MOUNT ASSEMBLY INSTRUCTIONS (CONT.)

8. Secure the base (A) in the manner appropriate to your intended mounting method. (U-bolts, screws, etc., NOT included.) Insert the shoulder bolt (F) and corresponding 1/2"-13 serrated nut (G) to the bottom hole location in the base as shown below.
9. This step may require additional help. Once the hardware has been installed, lift the assembly into position, align the slot of the pipe bracket with the shoulder bolt, and lower the unit until it rests on the shoulder bolt.
10. Install the 1/2" x 1-1/4" serrated flange screw (E) in the top position hole and secure it with 1/2"-13 serrated nut (G).

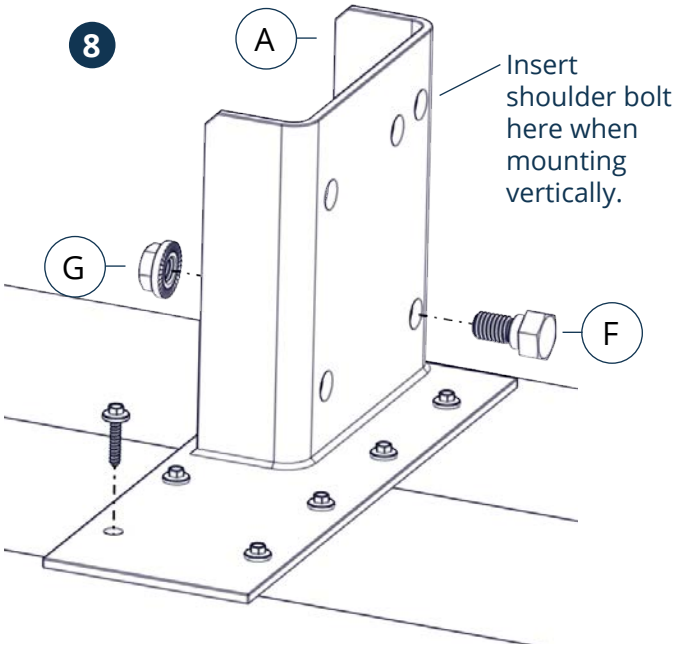

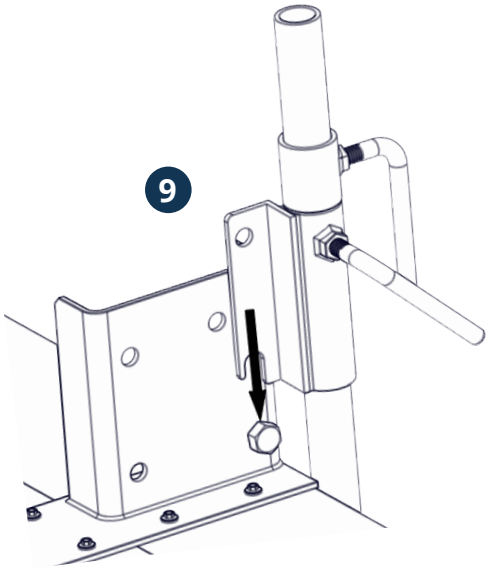

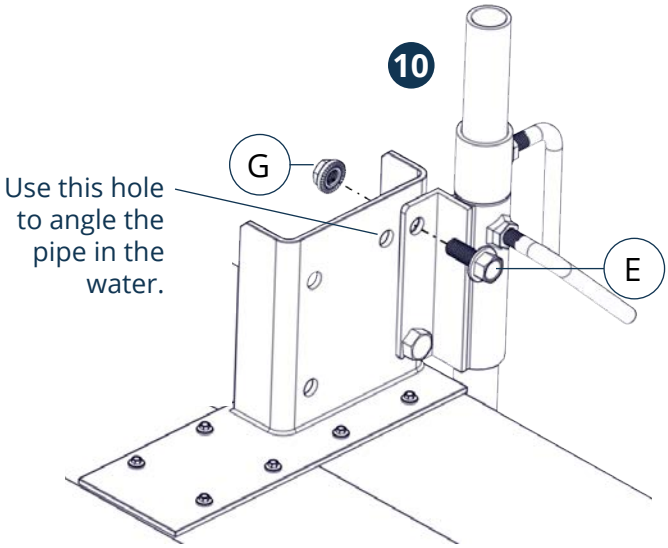

Back to Contents

ADJUSTMENTS AND STORAGE

11. The unit can be adjusted up or down or swiveled left or right, depending on the installation and as needed for maintenance and storage.
12. If you install the upper mount assembly horizontally (as pictured below), the unit can be pivoted up and out of the water for storage or unit maintenance by removing the top 1/2" x 1-1/4" hardware and pivoting the unit 90 degrees. For vertical or horizontal installations, the unit can be removed entirely from the mount by lifting the bracket off of the shoulder bolt.
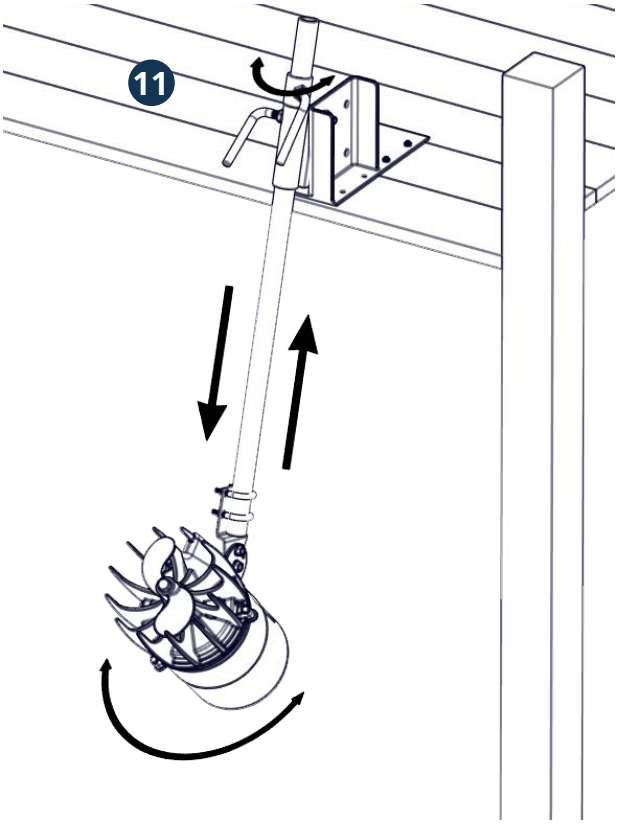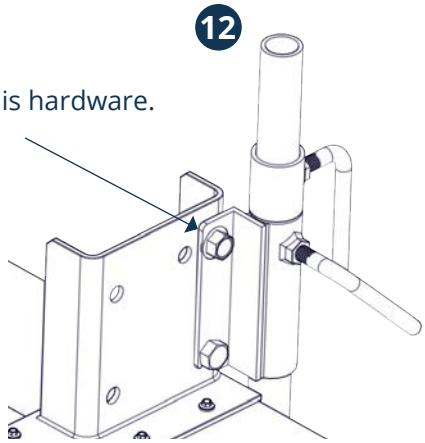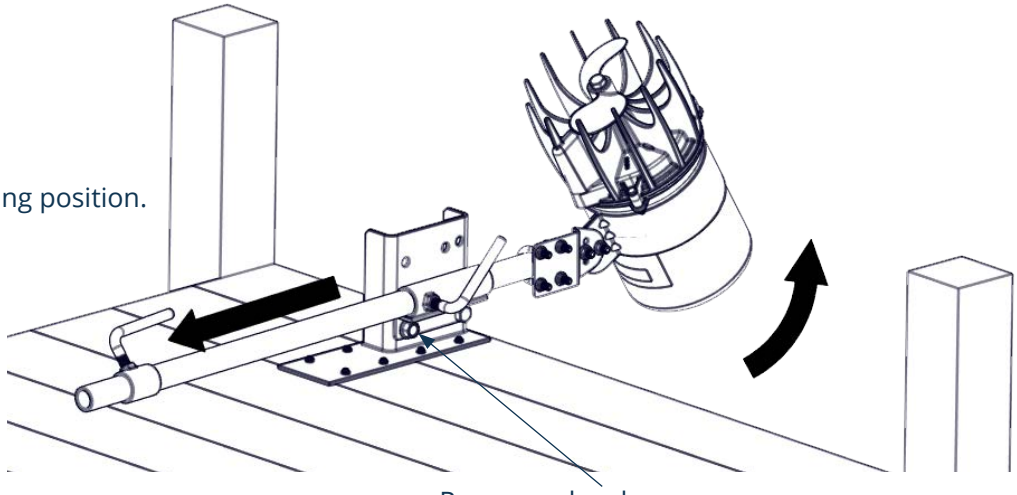
Once you tighten the lock handle on the Simple Swivel, keep it locked. For maintenance or to oscillate the unit in the water, loosen the bottom lock handle. Use the top lock handle to adjust the unit's position, and be sure to re-tighten the bottom lock handle when you're done.